aiwa SERVICE

CA-DW537 U(S),LH(S)

SERVICE MANUAL

COMPACT DISC CARRY
COMPONENT SYSTEM

BASIC TAPE MECHANISM : ZZM-2 YPR3NF
BASIC CD MECHANISM : DTA11T3C

• Replace this Service Manual with ”Revision Publishing” when it is issued.

aiwa

S/M Code No. 09-003-342-1T1

SIMPLE DATA

ELECTRICAL MAIN PARTS LIST - 1

NOTE: The characters in the suffix column indicate the part usage.

LH<S> .....XX.....A.....
U<S> .....XX.....B.....

REF.NO	PARTS NO.	NO.	DESCRIPTION	SUFFIX
C 239	87-010-197-080		CAP, CHIP 0.01 DM	AB
C 240	87-010-197-080		CAP, CHIP 0.01 DM	AB
C 239	87-010-213-080		C-CAP,S 0.015-50 B	AB
C 238	87-010-263-080		CAP, ELECT 100-10V	AB
C 241	87-010-401-080		CAP, ELECT 1-50V	AB
C 242	87-010-401-080		CAP, ELECT 1-50V	AB
C 243	87-010-401-080		CAP, ELECT 1-50V	AB
C 244	87-010-401-080		CAP, ELECT 1-50V	AB
C 245	87-010-401-080		CAP, ELECT 1-50V	AB
C 246	87-010-401-080		CAP, ELECT 1-50V	AB
C 247	87-010-404-080		CAP, ELECT 4.7-50V	AB
C 248	87-010-404-080		CAP, ELECT 4.7-50V	AB
C 291	87-010-404-080		CAP, ELECT 4.7-50V	AB
C 293	87-010-404-080		CAP, ELECT 4.7-50V	AB
C 237	87-010-408-080		CAP, ELECT 47-50V	AB
C 217	87-010-450-080		CAPACITOR 0.47U	AB
C 218	87-010-450-080		CAPACITOR 0.47U	AB
C 231	87-015-632-080		C-CAP,0.015-50 B	AB
C 232	87-015-632-080		C-CAP,0.015-50 B	AB
C 235	87-015-785-080		CHIP CAPACITOR, 0.1FZ-25Z	AB
C 236	87-015-785-080		CHIP CAPACITOR, 0.1FZ-25Z	AB
C 215	87-A10-201-080		C-CAP,S0.33-16 KB	AB
C 216	87-A10-201-080		C-CAP,S0.33-16 KB	AB
C 233	87-A10-201-080		C-CAP,S0.33-16 KB	AB
C 234	87-A10-201-080		C-CAP,S0.33-16 KB	AB
IC 203	87-A21-520-040		C-IC,M61509FP	AB
D 281	87-A40-466-080		ZENER,MTZJ2.7A	AB
C 278	87-010-112-080		CAP, ELECT 100-16V	AB
C 279	87-010-112-080		CAP, ELECT 100-16V	AB
C 263	87-010-178-080		CHIP CAP 1000P	AB
C 264	87-010-178-080		CHIP CAP 1000P	AB
C 280	87-010-198-080		CAP, CHIP 0.022	AB
C 271	87-010-237-080		CAP, ELECT 1000-16V	AB
C 272	87-010-237-080		CAP, ELECT 1000-16V	AB
C 251	87-010-401-080		CAP, ELECT 1-50V	AB
C 261	87-010-402-080		CAP, ELECT 2.2-50V	AB
C 262	87-010-402-080		CAP, ELECT 2.2-50V	AB
C 277	87-010-404-080		CAP, ELECT 4.7-50V	AB
C 266	87-010-545-080		CAP, ELECT 0.22-50V	AB
C 267	87-010-545-080		CAP, ELECT 0.22-50V	AB
CN 201	87-049-469-010		CONN,4P V	AB
IC 202	87-A21-090-010		IC,LA4600	AB
Q 243	89-320-011-080		TR,2SC2001 (15W)	AB
Q 244	89-320-011-080		TR,2SC2001 (15W)	AB
J 251	8A-CT9-630-010		JACK,MIC ST SW	AB
D 511	87-001-731-080		ZENER,HZS6C2L	AB
C 500	87-010-197-010		CAP, S 0.01-25	AB
C 515	87-010-197-010		CAP, S 0.01-25	AB
C 517	87-010-197-010		CAP, S 0.01-25	AB
C 508	87-010-221-080		CAP, ELECT 470-10V	AB
C 510	87-010-248-080		CAP, ELECT 220-10V	AB
C 514	87-010-248-080		CAP, ELECT 220-10V	AB
C 511	87-010-374-080		CAP, ELECT 47-10V	AB
C 516	87-010-384-080		CAP, ELECT 100-25V	AB
C 512	87-010-385-080		CAP, ELECT 220-25V	AB
C 507	87-010-401-080		CAP, ELECT 1-50V	AB
C 506	87-010-404-080		CAP, ELECT 4.7-50V	AB
C 501	87-010-453-010		CAP, ELECT 4700-25V	AB
Q 503	87-026-291-080		TR,DTC124XS	AB
Q 505	87-026-462-080		TR,2SC1740 S(RS 0.3W)	AB
Q 502	87-026-463-080		TR,2SA933S (0.3W)	AB
CN 501	87-049-919-010		CONN,3P EH V WHT	AB
D 503	87-070-345-080		DIODE,IN4148	AB
D 505	87-070-345-080		DIODE,IN4148	AB
D 506	87-070-345-080		DIODE,IN4148	AB
Q 504	87-A30-226-010		TR,2SB1655E	AB
D 507	87-A40-234-080		ZENER,MTZJ5.6A	AB
D 504	87-A40-648-080		ZENER,MTZJ8.2A	AB
Q 501	89-112-965-080		TR,2SA1296 (0.75W)	AB
Q 506	89-320-011-080		TR,2SC2001 (15W)	AB
Q 510	89-320-011-080		TR,2SC2001 (15W)	AB
D 761	84-RM1-695-010		DIODE,1N4148	AB
D 762	84-RM1-695-010		DIODE,1N4148	AB
IC 302	87-001-440-010		IC,BA15218N	AB
C 303	87-010-177-080		C-CAP,S 820P-50 SL	AB
C 304	87-010-177-080		C-CAP,S 820P-50 SL	AB
C 328	87-010-178-080		CHIP CAP 1000P	AB
C 332	87-010-178-080		CHIP CAP 1000P	AB
C 325	87-010-180-080		C-CER 1500P	AB
C 326	87-010-180-080		C-CER 1500P	AB
C 329	87-010-182-080		C-CAP,S 2200P-50 B	AB
C 330	87-010-182-080		C-CAP,S 2200P-50 B	AB
C 363	87-010-182-080		C-CAP,S 2200P-50 B	AB
C 364	87-010-182-080		C-CAP,S 2200P-50 B	AB
C 323	87-010-197-080		CAP, CHIP 0.01 DM	AB
C 324	87-010-197-080		CAP, CHIP 0.01 DM	AB

ELECTRICAL MAIN PARTS LIST - 2

C	350	87-010-197-080	CAP, CHIP 0.01 DM		AB
C	762	87-010-198-080	CAP, CHIP 0.022		AB
C	311	87-010-248-080	CAP, ELECT 220-10V		AB
C	344	87-010-303-080	C-CAP,S 330P-50CH		AB
C	305	87-010-374-080	CAP, ELECT 47-10V		AB
C	306	87-010-374-080	CAP, ELECT 47-10V		AB
C	312	87-010-374-080	CAP, ELECT 47-10V		AB
C	331	87-010-374-080	CAP, ELECT 47-10V		AB
C	307	87-010-382-080	CAP, ELECT 22-25V		AB
C	317	87-010-382-080	CAP, ELECT 22-25V		AB
C	318	87-010-382-080	CAP, ELECT 22-25V		AB
C	315	87-010-401-080	CAP, ELECT 1-50V		AB
C	316	87-010-401-080	CAP, ELECT 1-50V		AB
C	327	87-010-404-080	CAP, ELECT 4.7-50V		AB
C	308	87-010-405-080	CAP, ELECT 10-50V		AB
C	319	87-010-405-080	CAP, ELECT 10-50V		AB
C	320	87-010-405-080	CAP, ELECT 10-50V		AB
C	309	87-010-545-080	CAP, ELECT 0.22-50V		AB
C	310	87-010-545-080	CAP, ELECT 0.22-50V		AB
C	334	87-012-155-080	C-CAP 180P-50CH		AB
C	301	87-012-157-080	C-CAP,S 330P-50 CH		AB
C	302	87-012-157-080	C-CAP,S 330P-50 CH		AB
C	321	87-012-157-080	C-CAP,S 330P-50 CH		AB
C	322	87-012-157-080	C-CAP,S 330P-50 CH		AB
C	341	87-012-157-080	C-CAP,S 330P-50 CH		AB
C	342	87-012-157-080	C-CAP,S 330P-50 CH		AB
C	343	87-012-157-080	C-CAP,S 330P-50 CH		AB
C	313	87-015-834-080	C-CAP,0.033-25		AB
C	314	87-015-834-080	C-CAP,0.033-25		AB
C	765	87-016-669-080	C-CAP,S 0.1-25 K B		AB
IC	301	87-020-828-010	IC,BA3416BL	*	AB
SFR	761	87-024-239-010	SFR,2.2K V RH0632C		AB
Q	311	87-026-291-080	TR,DTC124XS		AB
Q	762	87-026-291-080	TR,DTC124XS		AB
Q	763	87-026-291-080	TR,DTC124XS		AB
Q	764	87-026-291-080	TR,DTC124XS		AB
Q	771	87-026-291-080	TR,DTC124XS		AB
Q	308	87-026-462-080	TR,2SC1740 S(RS 0.3W)		AB
Q	761	87-026-463-080	TR,2SA933S (0.3W)		AB
R	761	87-029-019-010	RES, FUSEIBLE 1/2W-2.2		AB
PN	751	87-099-832-010	CONN,8P S2M-8W		AB
PN	301	87-A60-110-010	CONN,4P V S2M-4W		AB
PN	302	87-A60-111-010	CONN,5P V S2M 5W		AB
SW	301	88-CT6-619-010	BACK SLIDE SW 6P2T SHORTIN		AB
L	330	88-CT6-620-010	REC OSC		AB
		88-CT6-632-010	TERMINAL,ASSY MECHA 1P		AB
Q	770	89-112-965-080	TR,2SA1296 (0.75W)		AB
Q	306	89-320-011-080	TR,2SC2001 (15W)		AB
C	521	87-010-197-080	CAP, CHIP 0.01 DM		AB
C	514	87-010-248-080	CAP, ELECT 220-10V		AB
C	522	87-010-263-080	CAP, ELECT 100-10V		AB
C	544	87-010-405-080	CAP, ELECT 10-50V		A
D	532	87-027-399-080	ZENER,HZ7A3L (200MA)		.B
D	532	87-027-607-080	ZENER,HZ7B3L		A
CN	502	87-049-919-010	CONN,3P EH V WHT		AB
D	533	87-070-345-080	DIODE,IN4148		AB
D	523	87-070-345-080	DIODE,IN4148		A
CN	505	87-A60-109-010	CONN,2P V S2M-2W		AB
Q	521	89-318-154-080	TR,2SC1815 (0.4W)		AB
D	601	84-RM1-695-010	DIODE,1N4148		AB
D	602	84-RM1-695-010	DIODE,1N4148		AB
D	611	84-RM1-695-010	DIODE,1N4148		AB
D	612	84-RM1-695-010	DIODE,1N4148		AB
D	615	84-RM1-695-010	DIODE,1N4148		AB
D	616	84-RM1-695-010	DIODE,1N4148		AB
D	625	84-RM1-695-010	DIODE,1N4148		AB
D	627	84-RM1-695-010	DIODE,1N4148		AB
L	601	87-003-149-080	COIL,47UH		AB
D	611	87-020-465-080	DIODE,1SS133 (110MA)		.B
Q	601	87-026-291-010	TR,DTC124XS		AB
Q	603	87-026-291-010	TR,DTC124XS		AB
Q	616	87-026-291-010	TR,DTC124XS		AB
Q	602	87-026-463-010	TR,2SA933S,RS		AB
Q	605	87-026-464-010	TR,DTC114TS		AB
Q	606	87-026-464-010	TR,DTC114TS		AB
Q	607	87-026-464-010	TR,DTC114TS		AB
Q	608	87-026-464-010	TR,DTC114TS		AB
Q	609	87-026-464-010	TR,DTC114TS		AB
Q	610	87-026-464-010	TR,DTC114TS		AB
Q	611	87-026-464-010	TR,DTC114TS		AB
Q	612	87-026-464-010	TR,DTC114TS		AB
X	601	87-030-273-010	VIB,XTAL 32.768K5PPM		AB
IC	602	87-A20-914-010	IC,SPS-442-1-F		AB
CN	601	87-A60-109-010	CONN,2P V S2M-2W		AB
X	602	87-A70-070-080	VIB,CER 5.76MHZ CRHF		AB
IC	601	8A-CH4-661-010	C-IC,LC867132V-****		AB
LCD	601	8A-CT9-620-010	LCD,HLC7107ACT-9		AB
LED	605	8Z-CT6-632-010	LED,L-934LID		AB
LED	606	8Z-CT6-632-010	LED,L-934LID		AB
LED	607	8Z-CT6-632-010	LED,L-934LID		AB
LED	608	8Z-CT6-632-010	LED,L-934LID		AB
LED	609	8Z-CT6-632-010	LED,L-934LID		AB
LED	610	8Z-CT6-632-010	LED,L-934LID		AB

S	602	8Z-CT6-636-010	SW,TACT EVQJAC04M	AB
S	603	8Z-CT6-636-010	SW,TACT EVQJAC04M	AB
S	604	8Z-CT6-636-010	SW,TACT EVQJAC04M	AB
S	605	8Z-CT6-636-010	SW,TACT EVQJAC04M	AB
S	606	8Z-CT6-636-010	SW,TACT EVQJAC04M	AB
S	607	8Z-CT6-636-010	SW,TACT EVQJAC04M	AB
S	608	8Z-CT6-636-010	SW,TACT EVQJAC04M	AB
S	609	8Z-CT6-636-010	SW,TACT EVQJAC04M	AB
S	610	8Z-CT6-636-010	SW,TACT EVQJAC04M	AB
S	611	8Z-CT6-636-010	SW,TACT EVQJAC04M	AB
S	612	8Z-CT6-636-010	SW,TACT EVQJAC04M	AB
S	613	8Z-CT6-636-010	SW,TACT EVQJAC04M	AB
S	614	8Z-CT6-636-010	SW,TACT EVQJAC04M	AB
S	615	8Z-CT6-636-010	SW,TACT EVQJAC04M	AB
S	616	8Z-CT6-636-010	SW,TACT EVQJAC04M	AB
C	617	87-010-179-080	CAP,CHIP S B1200P	AB
C	614	87-010-196-080	CHIP CAPACITOR,0.1-25	AB
C	607	87-010-197-080	CAP, CHIP 0.01 DM	AB
C	6001	87-010-198-080	CAP, CHIP 0.022	AB
C	612	87-010-248-080	CAP, ELECT 220-10V	AB
C	610	87-010-263-080	CAP, ELECT 100-10V	AB
C	618	87-010-263-080	CAP, ELECT 100-10V	AB
C	601	87-010-313-080	CAP, CHIP 18P	AB
C	604	87-010-314-080	C-CAP,S 22P-50V	AB
C	602	87-010-315-080	C-CAP,S 27P-50 CH	AB
C	603	87-010-317-080	C-CAP,S 39P-50 CH	AB
C	605	87-010-317-080	C-CAP,S 39P-50 CH	AB
C	615	87-010-400-080	CAP, ELECT 0.47-50V	AB
C	616	87-010-401-080	CAP, ELECT 1-50V	AB
C	613	87-010-402-080	CAP, ELECT 2.2-50V	AB
C	606	87-012-350-080	C-CAP,1-25 F	AB
C	6002	87-015-883-080	CHIP CAPACITOR, 0.022 (D)	AB
C	608	87-016-669-080	C-CAP,S 0.1-25 K B	AB
C	609	87-016-669-080	C-CAP,S 0.1-25 K B	AB
C	611	87-016-669-080	C-CAP,S 0.1-25 K B	AB
CNA	603	8Z-CT6-638-010	CONN ASSY,4P LED,2.0MM	AB
C	833	87-010-178-080	CHIP CAP 1000P	AB
C	836	87-010-178-080	CHIP CAP 1000P	AB
C	837	87-010-178-080	CHIP CAP 1000P	AB
C	832	87-010-181-080	CAP,CHIP S 1800P	AB
C	830	87-010-197-080	CAP, CHIP 0.01 DM	AB
C	831	87-010-197-080	CAP, CHIP 0.01 DM	AB
C	840	87-010-221-080	CAP, ELECT 470-10V	AB
C	838	87-010-401-080	CAP, ELECT 1-50V	AB
C	839	87-010-401-080	CAP, ELECT 1-50V	AB
C	841	87-010-401-080	CAP, ELECT 1-50V	AB
C	844	87-010-401-080	CAP, ELECT 1-50V	AB
C	834	87-010-404-080	CAP, ELECT 4.7-50V	AB
C	835	87-010-544-080	CAP, ELECT 0.1-50V	AB
C	842	87-012-140-080	CAP 470P	AB
D	820	87-020-465-080	DIODE,1SS133 (110MA)	AB
D	821	87-020-465-080	DIODE,1SS133 (110MA)	AB
D	822	87-020-465-080	DIODE,1SS133 (110MA)	AB
Q	823	87-026-291-080	TR,DTC124XS	AB
Q	824	87-026-462-080	TR,2SC1740 S(RS 0.3W)	AB
Q	820	87-026-610-080	TR,KTC3198GR	AB
Q	822	87-026-610-080	TR,KTC3198GR	AB
VR	801	87-A90-768-010	VR,RTRY 10KAX1 1 H	AB
Q	821	89-322-405-080	TR,2SC2240GR	AB
J	801	8A-CT9-630-010	JACK,MIC ST SW	AB
L	401	87-003-102-080	COIL, 10UH	AB
L	404	87-003-152-080	COIL, 100UH	AB
C	440	87-010-145-080	C-CAP,S 1P-50 CH	AB
C	425	87-010-176-080	C-CAP,S 680P-50 SL	AB
C	407	87-010-178-080	CHIP CAP 1000P	AB
C	439	87-010-178-080	CHIP CAP 1000P	AB
C	422	87-010-184-080	CHIP CAPACITOR 3300P(K)	AB
C	434	87-010-184-080	CHIP CAPACITOR 3300P(K)	AB
C	429	87-010-186-080	CAP,CHIP 4700P	AB
C	402	87-010-197-080	CAP, CHIP 0.01 DM	AB
C	405	87-010-197-080	CAP, CHIP 0.01 DM	AB
C	428	87-010-197-080	CAP, CHIP 0.01 DM	AB
C	435	87-010-197-080	CAP, CHIP 0.01 DM	AB
C	441	87-010-197-080	CAP, CHIP 0.01 DM	AB
C	461	87-010-197-080	CAP, CHIP 0.01 DM	AB
C	477	87-010-197-080	CAP, CHIP 0.01 DM	AB
C	479	87-010-197-080	CAP, CHIP 0.01 DM	AB
C	408	87-010-198-080	CAP, CHIP 0.022	AB
C	418	87-010-213-080	C-CAP,S 0.015-50 B	AB
C	480	87-010-221-080	CAP, ELECT 470-10V	AB
C	476	87-010-236-080	CAP,E 1000-10 SME	AB
C	455	87-010-247-080	CAP, ELECT 100-50V	AB
C	404	87-010-248-080	CAP, ELECT 220-10V	AB
C	409	87-010-248-080	CAP, ELECT 220-10V	AB
C	462	87-010-248-080	CAP, ELECT 220-10V	AB
C	403	87-010-263-080	CAP, ELECT 100-10V	AB
C	410	87-010-263-080	CAP, ELECT 100-10V	AB
C	459	87-010-263-080	CAP, ELECT 100-10V	AB
C	467	87-010-263-080	CAP, ELECT 100-10V	AB
C	478	87-010-263-080	CAP, ELECT 100-10V	AB
C	4003	87-010-297-080	CAP CHIO 100P	AB
C	4005	87-010-297-080	CAP CHIO 100P	AB
C	450	87-010-305-080	C-CAP 470P-50CH	AB

ELECTRICAL MAIN PARTS LIST - 4

C	442	87-010-312-080	C-CAP,S 15P-50 CH	AB
C	457	87-010-312-080	C-CAP,S 15P-50 CH	AB
C	458	87-010-312-080	C-CAP,S 15P-50 CH	AB
C	448	87-010-315-080	C-CAP,S 27P-50 CH	AB
C	4002	87-010-322-080	C-CAP,S 100P-50 CH	AB
C	4004	87-010-322-080	C-CAP,S 100P-50 CH	AB
C	4006	87-010-322-080	C-CAP,S 100P-50 CH	AB
C	406	87-010-374-080	CAP, ELECT 47-10V	AB
C	432	87-010-374-080	CAP, ELECT 47-10V	AB
C	436	87-010-374-080	CAP, ELECT 47-10V	AB
C	412	87-010-401-080	CAP, ELECT 1-50V	AB
C	433	87-010-401-080	CAP, ELECT 1-50V	AB
C	401	87-010-403-080	CAP, ELECT 3.3-50V	AB
C	437	87-010-404-080	CAP, ELECT 4.7-50V	AB
C	465	87-010-404-080	CAP, ELECT 4.7-50V	AB
C	414	87-010-405-080	CAP, ELECT 10-50V	AB
C	481	87-010-405-080	CAP, ELECT 10-50V	AB
C	482	87-010-405-080	CAP, ELECT 10-50V	AB
C	470	87-010-544-080	CAP, ELECT 0.1-50V	AB
C	416	87-010-545-080	CAP, ELECT 0.22-50V	AB
C	431	87-010-545-080	CAP, ELECT 0.22-50V	AB
C	423	87-010-758-080	C-CAP,U 0.068-25F	AB
C	472	87-010-858-080	C-CAP,0.1-250 K	AB
C	473	87-010-858-080	C-CAP,0.1-250 K	AB
C	474	87-010-858-080	C-CAP,0.1-250 K	AB
C	424	87-010-959-080	CHIP CAP,U 0.056-16F	AB
C	469	87-012-154-080	C-CAP,S 150P-50 CH	AB
C	430	87-012-156-080	C-CAP,S 220P-50 CH	AB
C	451	87-012-156-080	C-CAP,S 220P-50 CH	AB
C	483	87-012-156-080	C-CAP,S 220P-50 CH	AB
C	484	87-012-156-080	C-CAP,S 220P-50 CH	AB
C	417	87-012-157-080	C-CAP,S 330P-50 CH	AB
C	438	87-012-368-080	C-CAP,S 0.1-50 F	AB
C	445	87-012-368-080	C-CAP,S 0.1-50 F	AB
C	446	87-012-368-080	C-CAP,S 0.1-50 F	AB
C	447	87-012-368-080	C-CAP,S 0.1-50 F	AB
C	466	87-012-368-080	C-CAP,S 0.1-50 F	AB
C	489	87-012-368-080	C-CAP,S 0.1-50 F	AB
C	490	87-012-368-080	C-CAP,S 0.1-50 F	AB
C	4001	87-012-368-080	C-CAP,S 0.1-50 F	AB
C	4010	87-012-368-080	C-CAP,S 0.1-50 F	AB
C	460	87-015-819-080	CAPACITOR,0.01	AB
C	475	87-015-819-080	CAPACITOR,0.01	AB
C	413	87-016-369-080	C-CAP,S 0.033-25 B K	AB
C	420	87-016-369-080	C-CAP,S 0.033-25 B K	AB
C	463	87-018-134-080	CAPACITOR,TC-U 0.01-16	AB
C	494	87-018-134-080	CAPACITOR,TC-U 0.01-16	AB
SFR	430	87-024-437-080	SFR100K,RH063EC	AB
D	401	87-070-345-080	DIODE,IN4148	AB
D	402	87-070-345-080	DIODE,IN4148	AB
D	403	87-070-345-080	DIODE,IN4148	AB
CNA	402	87-099-854-010	CONN,6P S2M-6W	AB
R	488	87-A00-296-080	C-RES,100K-1/8W F	AB
C	411	87-A11-177-080	C-CAP,S 0.15-16 K B	AB
C	421	87-A11-177-080	C-CAP,S 0.15-16 K B	AB
C	419	87-A11-608-080	C-CAP,S 0.33-25 K B	AB
C	426	87-A11-608-080	C-CAP,S 0.33-25 K B	AB
IC	401	87-A20-446-010	C-IC,LA9241ML	AB
IC	402	87-A20-459-010	C-IC,LC78622ED	AB
IC	404	87-A21-093-010	IC,LA6541D	AB
CN	401	87-A60-424-010	CONN,16P V TOC-B	AB
Q	401	89-109-332-380	TR,2SA933RS	AB
Q	402	89-113-187-080	TR,2SA1318TU	AB
X	401	8Z-CD5-633-010	VIB, CER16.93MHZ FCR16.93M2	AB
C	493	87-010-197-080	CAP, CHIP 0.01 DM	AB
C	492	87-010-221-080	CAP, ELECT 470-10V	AB
C	491	87-015-819-080	CAPACITOR,0.01	AB
Q	492	87-026-291-080	TR,DTC124XS	AB
D	491	87-070-345-080	DIODE,IN4148	AB
D	494	87-070-345-080	DIODE,IN4148	AB
Q	491	89-112-965-080	TR,2SA1296 (0.75W)	AB
C	901	87-A10-577-080	CAP,CER 0.022-50 Z YF	AB
C	902	87-A10-577-080	CAP,CER 0.022-50 Z YF	AB
C	903	87-A10-577-080	CAP,CER 0.022-50 Z YF	AB
C	904	87-A10-577-080	CAP,CER 0.022-50 Z YF	AB
D	901	87-A40-465-010	DIODE,FR202	AB
D	902	87-A40-465-010	DIODE,FR202	AB
D	903	87-A40-465-010	DIODE,FR202	AB
D	904	87-A40-465-010	DIODE,FR202	AB
D	905	87-A40-465-010	DIODE,FR202	AB
FC	901	87-A90-160-080	FUSE CLAMP,FC 51F	AB
FC	902	87-A90-160-080	FUSE CLAMP,FC 51F	AB
		88-CT6-624-010	SPR,BATT	AB
CNA	901	8Z-CT9-640-010	CONN ASSY,3P EH(POWER)	AB
F	901	87-035-139-010	FUSE, 2.5A T 250V	A
F	901	87-035-367-010	FUSE, 3.15A 250V	.B
F	901	87-035-486-010	FUSE,2.5A 125V D UL	AB
J	901	87-A60-177-010	JACK,AC U W/SW	.B
		87-A90-086-010	COVER,AC-SOCKET	.B
S	901	87-A91-302-010	SW,AC SL 2 2 2 SDKGA40100	A
CN	301	88-CT6-604-010	CONN ASSY,4P PH	AB
CN	302	88-CT6-605-010	CONN ASSY,5P RPH	AB
		88-CT6-606-010	FFC WIRE 16P(1.0)	AB

ELECTRICAL MAIN PARTS LIST - 5

CN	751	88-CT6-608-010	CONN ASSY,8P MO	AB
PT	901	88-CT6-631-010	POWER TRANS,EI-57/25	A
ANT	1	88-CT6-633-010	ANT,ROD	AB
PT	901	88-CT7-629-010	PT,U	.B
CNA	402	8Z-CT6-631-010	CONN ASSY,6P CD MO	AB
CF	2	82-785-747-080	CF,MS2 GHY,R	AB
CF	3	82-785-747-080	CF,MS2 GHY,R	AB
L	8	87-005-849-080	COIL,10UH(CECS)	AB
L	9	87-005-849-080	COIL,10UH(CECS)	AB
C	13	87-010-150-080	C-CAP,S 6P-50 CH	AB
C	17	87-010-194-080	CAP, CHIP 0.047	A
C	10	87-010-197-080	CAP, CHIP 0.01 DM	AB
C	11	87-010-197-080	CAP, CHIP 0.01 DM	AB
C	12	87-010-197-080	CAP, CHIP 0.01 DM	AB
C	21	87-010-197-080	CAP, CHIP 0.01 DM	AB
C	22	87-010-197-080	CAP, CHIP 0.01 DM	AB
C	23	87-010-197-080	CAP, CHIP 0.01 DM	AB
C	37	87-010-197-080	CAP, CHIP 0.01 DM	AB
C	40	87-010-197-080	CAP, CHIP 0.01 DM	AB
C	46	87-010-197-080	CAP, CHIP 0.01 DM	AB
C	47	87-010-197-080	CAP, CHIP 0.01 DM	AB
C	48	87-010-197-080	CAP, CHIP 0.01 DM	AB
C	50	87-010-197-080	CAP, CHIP 0.01 DM	AB
C	71	87-010-197-080	CAP, CHIP 0.01 DM	AB
C	73	87-010-197-080	CAP, CHIP 0.01 DM	AB
C	75	87-010-197-080	CAP, CHIP 0.01 DM	.B
C	91	87-010-197-080	CAP, CHIP 0.01 DM	AB
C	92	87-010-197-080	CAP, CHIP 0.01 DM	AB
C	93	87-010-197-080	CAP, CHIP 0.01 DM	AB
C	52	87-010-197-080	CAP, CHIP 0.01 DM	A
C	53	87-010-197-080	CAP, CHIP 0.01 DM	A
C	55	87-010-197-080	CAP, CHIP 0.01 DM	A
C	30	87-010-198-080	CAP, CHIP 0.022	AB
C	31	87-010-198-080	CAP, CHIP 0.022	AB
C	19	87-010-263-080	CAP, ELECT 100-10V	AB
C	36	87-010-263-080	CAP, ELECT 100-10V	AB
C	72	87-010-263-080	CAP, ELECT 100-10V	AB
C	14	87-010-303-080	C-CAP,S 330P-50CH	AB
C	44	87-010-311-080	CAP 12P	AB
C	45	87-010-312-080	C-CAP,S 15P-50 CH	AB
C	6	87-010-313-080	CAP, CHIP 18P	AB
C	1	87-010-314-080	C-CAP,S 22P-50V	AB
C	3	87-010-314-080	C-CAP,S 22P-50V	AB
C	2	87-010-316-080	C-CAP,S 33P-50 CH	AB
C	16	87-010-374-080	CAP, ELECT 47-10V	AB
C	38	87-010-374-080	CAP, ELECT 47-10V	AB
C	20	87-010-404-080	CAP, ELECT 4.7-50V	AB
C	39	87-010-404-080	CAP, ELECT 4.7-50V	AB
TC	1	87-011-254-080	TRIMER,20P LAR	AB
C	49	87-012-140-080	CAP 470P	AB
C	8	87-012-349-080	C-CAP,S 1000P-50 CH	AB
C	15	87-012-349-080	C-CAP,S 1000P-50 CH	AB
C	41	87-012-349-080	C-CAP,S 1000P-50 CH	AB
C	42	87-012-349-080	C-CAP,S 1000P-50 CH	AB
C	43	87-012-349-080	C-CAP,S 1000P-50 CH	AB
C	33	87-012-353-080	C-CAP,0.33-16 R	AB
C	34	87-012-353-080	C-CAP,0.33-16 R	AB
C	7	87-014-049-080	CAP,PP 470P-100 J	AB
C	35	87-015-819-080	CAPACITOR,0.01	AB
C	18	87-015-835-080	C-CAP,0.047 D	AB
C	25	87-016-460-080	C-CAP,S 0.22-16 B	AB
C	5	87-016-669-080	C-CAP,S 0.1-25 K B	AB
C	28	87-016-669-080	C-CAP,S 0.1-25 K B	AB
C	29	87-016-669-080	C-CAP,S 0.1-25 K B	AB
D	6	87-017-072-080	ZENER,HZS3B1	AB
C	26	87-018-131-080	CAP, CER 1000P-50V	AB
D	1	87-020-465-080	DIODE,1SS133 (110MA)	AB
D	2	87-020-465-080	DIODE,1SS133 (110MA)	AB
Q	4	87-026-213-080	CHIP-TR,DTC114YK	AB
Q	54	87-026-230-080	CHIP-TR,DTA114YK	AB
Q	2	87-026-447-080	TR,2SC1740S R	AB
C	27	87-A11-067-080	C-CAP,S 1-10 K B	AB
IC	2	87-A21-185-040	C-IC,LC72121M	AB
IC	1	87-A21-550-010	IC,TA2149N	AB
D	4	87-A40-128-080	C-VARI-CAP,HVU202A	AB
D	5	87-A40-128-080	C-VARI-CAP,HVU202A	AB
D	3	87-A40-616-070	VARI-CAP,SVC384(S/T)	AB
L	4	87-A50-420-010	COIL,MW OSC(SYN)	AB
L	2	87-A50-560-010	COIL,FM BPF(ACD)	AB
L	5	87-A50-566-010	COIL,FM RF EX(ACH)	AB
L	6	87-A50-568-010	COIL,FM OSC EX(ACH)	AB
X	1	87-A70-061-010	VIB,XTAL 4.500MHZ CSA-309	AB
CF	1	87-A91-094-010	FLTR,CDA10.7 MG80A	AB
L	7	87-A91-308-010	FLTR,PCFAZH- 450T (TOK)	AB
HD	1	88-CD6-661-010	HLDR,BAR ANT.	AB
HD	2	88-CD6-661-010	HLDR,BAR ANT.	AB
Q	3	89-111-624-080	TR,2SA1162Y	AB
Q	71	89-327-125-080	CHIP TR,2SC2712GR	AB
Q	1	89-327-143-080	TR,2SC2714 (0.1W)	AB
L	3	8A-CH4-670-010	BAR-ANT,MW 2B-ACH(COI)	AB
CN	603	87-A61-265-080	CONN,4P H,LED-PWB	AB
LED	602	8Z-CT6-632-010	LED,L-934LID	AB
LED	603	8Z-CT6-632-010	LED,L-934LID	AB

LED 604	8Z-CT6-632-010	LED,L-934LID	AB.....

SCHEMATIC DIAGRAM-1

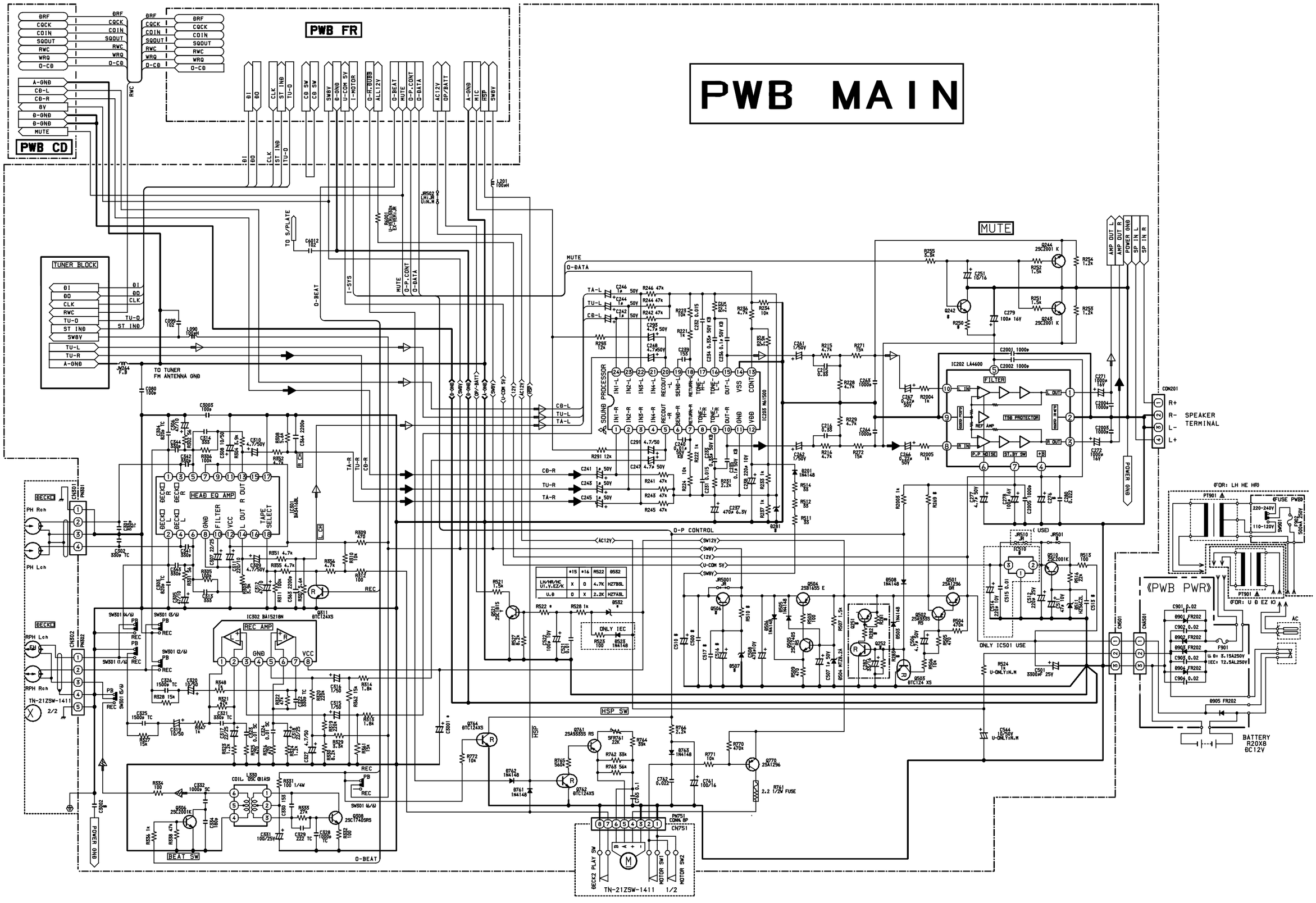

SCHEMATIC DIAGRAM-2

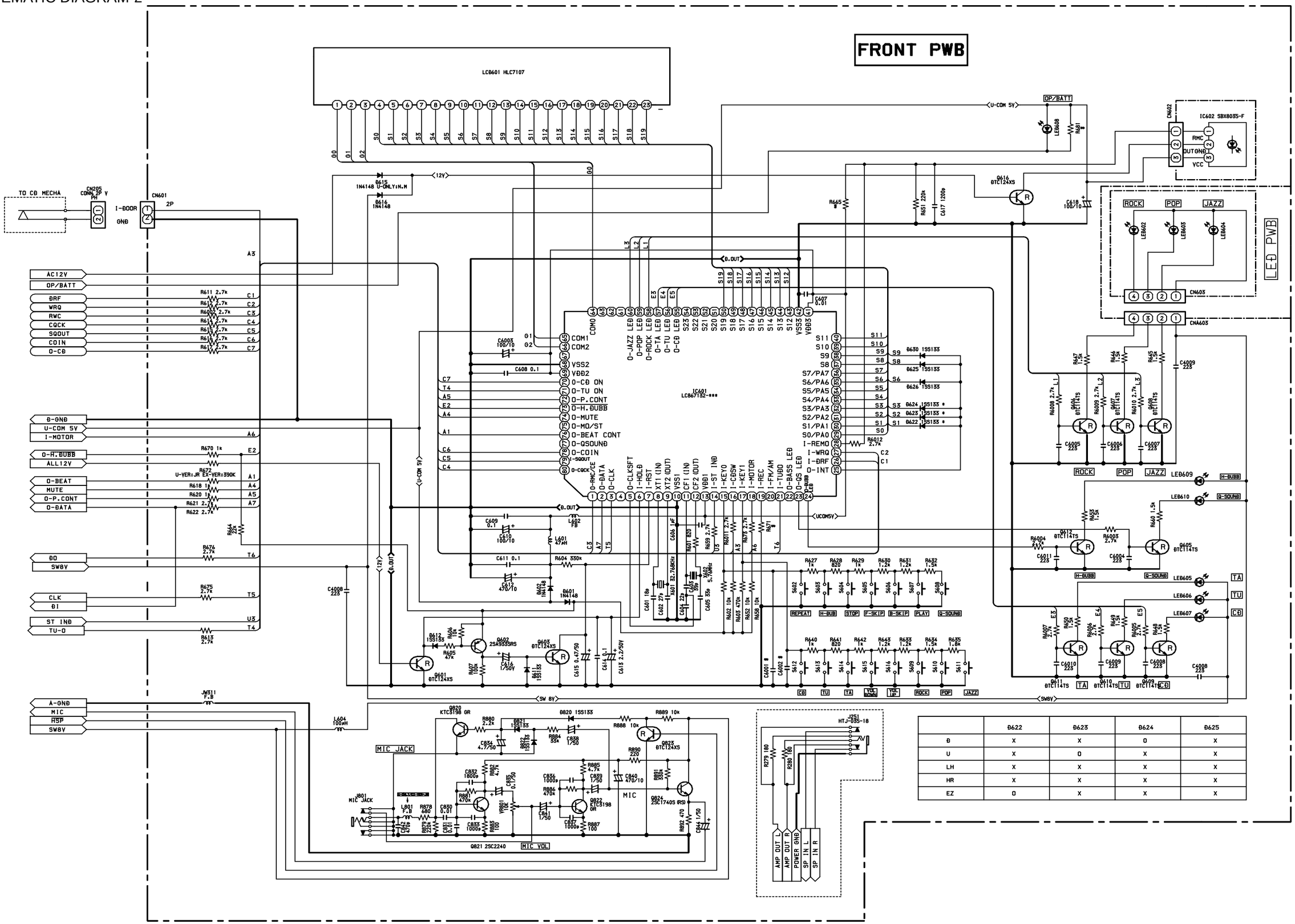

	Ø622	Ø623	Ø624	Ø625
Ø	X	X	O	X
U	X	O	X	X
LH	X	X	X	X
HR	X	X	X	X
EZ	O	X	X	X

SCHEMATIC DIAGRAM-3

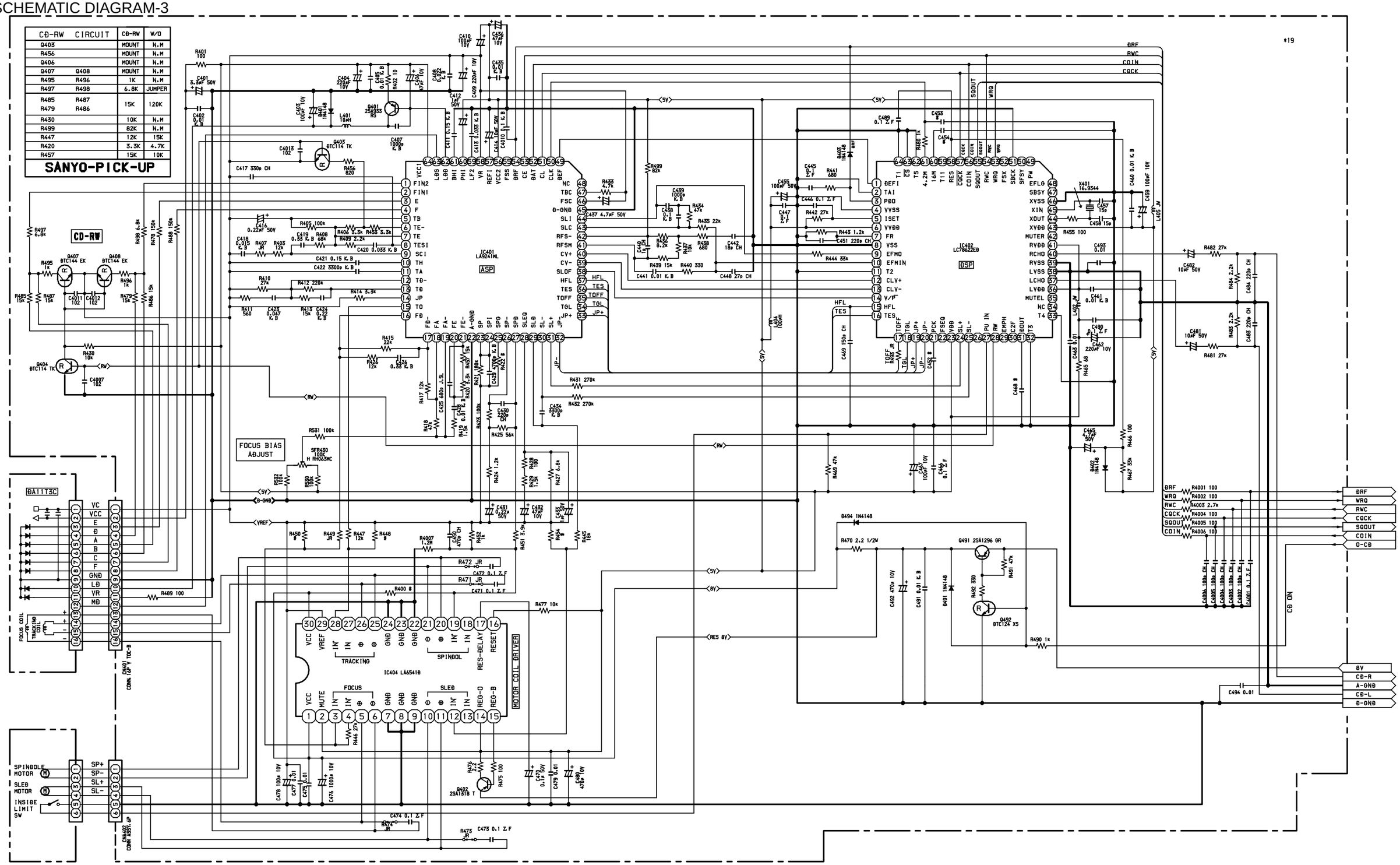

CD-RW CIRCUIT		CD-RW	W/O
Q403		MOUNT	N.M
R456		MOUNT	N.M
Q406		MOUNT	N.M
Q407	Q408	MOUNT	N.M
R495	R496	1K	N.M
R497	R498	6.8K	JUMPER
R485 R479	R487 R486	15K	120K
R430		10K	N.M
R499		82K	N.M
R447		12K	15K
R420		3.3K	4.7K
R457		15K	10K

SANYO-PICK-UP

OPTICAL-OUT	(X401)	(C457, 458)	(R455)	(C468)	(LED461)	(R468)	(C486)	(C485)	(R462)	(R461)	(Q461)
D	VIB. X'TAL 16.934MHZ	33p	1K	100P	SLZ-8128	100	103	100/10	390	220	2SA1235F
LH, HR, HE, HC, V	VIB. CER 16.934MHZ (TDK)	15p	100	N.M	N.M	N.M	N.M	N.M	N.M	N.M	N.M
U1	↓	↓	↓	↓	↓	↓	↓	↓	↓	↓	↓
U	↓	↓	↓	↓	↓	↓	↓	↓	↓	↓	↓
EZ, K	↓	↓	↓	↓	↓	↓	↓	↓	↓	↓	↓

SCHEMATIC DIAGRAM-4

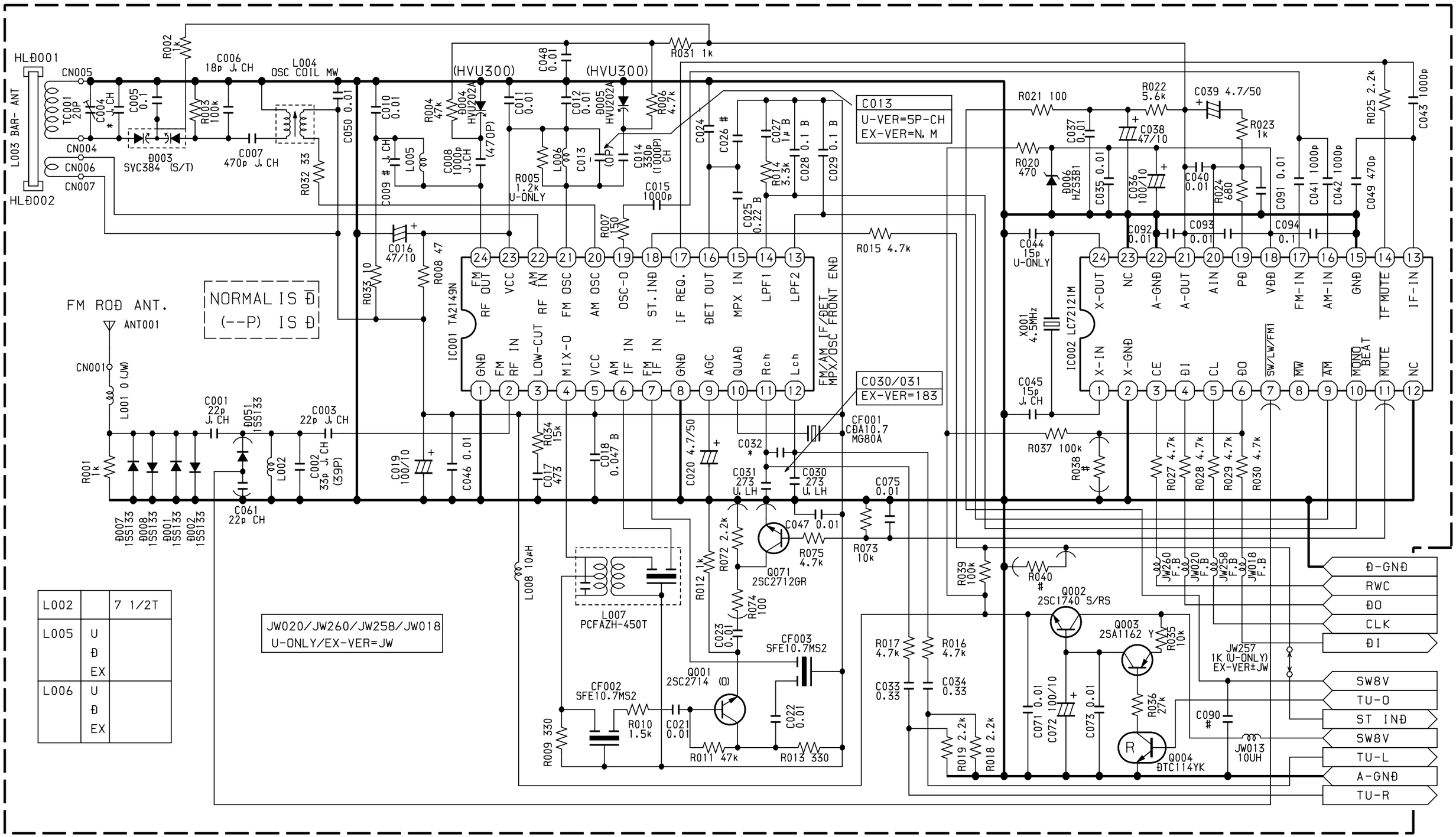

L002		7 1/2T
L005	U Đ EX	
L006	U Đ EX	

MECHANICAL PARTS LIST - 1

NOTE: The characters in the suffix column indicate the part usage.

LH<S> .....XX.....A.....
U<S> .....XX.....B.....

REF.NO	PARTS NO.	NO.	DESCRIPTION	SUFFIX
	86-CT6-035-010		LID,BATT RF	AB
	86-CT6-036-010		HANDL,RF	AB
	88-CT6-022-010		COVER, HNDL	AB
	88-CT6-046-010		PANEL,CD	AB
*	8A-CT6-001-010		CABI,FR U	.B
*	8A-CT6-004-010		CABI,FR LH	A.
	8A-CT9-002-010		BOX,CASS L	AB
	8A-CT9-003-010		BOX,CASS R	AB
	8A-CT9-004-010		BOX,CD	AB
	8A-CT9-005-010		WINDOW,CD	AB
	8A-CT9-006-010		WINDOW,CASS L	AB
	8A-CT9-007-010		WINDOW,CASS R	AB
	8A-CT9-008-010		WINDOW,DISP	AB
	8A-CT9-020-010		LENS,FUNC	AB
	8A-CT9-021-010		LENS,POWER	AB
	8A-CT9-022-010		LENS,GEQ	AB
	8Z-CT9-044-010		CABI,REAR	AB
	8A-CT9-010-010		KEY,FUNC	AB
	8A-CT9-011-010		BTN,CD A	AB
	8A-CT9-012-010		BTN,CD B	AB
	8A-CT9-013-010		KEY,CASS L	AB
	8A-CT9-014-010		KEY,CASS R	AB
	8A-CT9-015-010		BTN,VOL	AB
	8A-CT9-016-010		BTN,GEQ	.B
	8A-CT9-023-010		BTN,QSOUND	.B
	8A-CT9-051-010		BTN,GEQ LH	A.
	8Z-CT9-059-010		PLATE,SPKR (3.2 OHM)	AB
	86-CD4-225-010		CHUCK(A)	AB
	86-CT9-205-110		HLDR,REC	AB
	86-CT9-206-010		HLDR,TRANS	.B
	86-CT9-207-010		HLDR,ANT	AB
	86-CT9-208-010		HLDR,KEY CASS	AB
	86-CT9-210-010		SPR-T,CASS	AB
	86-CT9-212-010		SPR-C,BATT LINK	AB
	86-CT9-213-010		SPR-C,BATT(-)	AB
	86-CT9-219-110		OIL-DMPR,GEAR	AB
	86-CT9-220-110		OIL-DMPR,BRACKET	AB
	86-CT9-222-010		PLATE,MAGNET	AB
	86-CT9-223-010		CUSH,FOOT	AB
	87-036-368-010		MAGNET	AB
	88-CD6-661-010		HLDR,BAR ANT.	AB
	88-CH6-220-010		CUSHION,CD A	AB
*	8A-CT6-202-010		HLDR,LED GEQ	AB
	8A-CT9-201-010		CHAS,CD	AB
*	8A-CT9-203-010		HLDR,FUNC	AB
*	8A-CT9-204-010		HLDR,POWER	AB
*	8A-CT9-205-010		HLDR,LCD	AB
*	8A-CT9-211-010		HLDR,GEQ	AB
	8A-CT9-212-010		SPR-T,CD	AB
*	8A-CT9-213-010		HLDR,DUMPER	AB
	8A-CT9-215-010		SPR-P,REC A	AB
	8A-CT9-216-010		SPR-P,REC B	AB
	8Z-CT6-213-010		BASE,CHUCK	AB
	8Z-CT6-214-010		RING,CHUCK	AB
	81-CD5-204-010		SCREW CD	AB
	87-261-072-410		V+2.6-5	AB
*	87-571-033-410		TAPPING SCREW, VIT+2-4	AB
	87-571-095-410		VIT+3-8	AB
	87-651-075-210		VT1+2.6-10	AB
	87-651-100-410		VT1+3-16	AB
	87-651-104-410		VT1+3-30	AB
	87-721-095-410		QT2+3-8GLD W/O SLOT	AB
	87-751-095-410		VT2+3-8 W/O	AB
	87-751-097-410		SCREW 3X12	AB
	86-CT9-040-010		BADGE,AIWA -	AB
	86-CT9-117-010		CABI,SPKR-REAR L RF	AB
	86-CT9-118-010		CABI,SPKR-REAR R RF	AB
	86-CT9-121-010		HLDR,CORD RF	AB
*	8A-CT9-024-010		CABI,SPKR FR	AB
*	8A-CT9-025-010		CABI,SPKR FR R	AB
	8A-CT9-027-010		FRAME,SPKR NET	AB
	8A-CT9-030-010		NET,SPKR	AB
	88-CT6-632-010		TERMINAL,ASSY MECHA 1P	AB
	88-CT6-624-010		SPR,BATT	AB
	87-A90-086-010		COVER,AC-SOCKET	.B
	88-CT6-606-010		FFC WIRE 16P(1.0)	AB

ACCESSORIES LIST

NOTE: The characters in the suffix column indicate the part usage.

LH<S> .....XX.....A.....
U<S> .....XX.....B.....

REF.NO	PARTS NO.	NO.	DESCRIPTION	SUFFIX
	8A-CT6-902-010		IB,LH(ESP)FM	A.....
	8A-CT6-903-010		IB,U(ESF)FM	.B.....
	87-A80-033-010		AC CORD SET,D BLK	AB.....
	87-A80-036-010		AC CORD SET ASSY,E W/FLTR VOL	A.....
	87-A80-109-010		AC CORD,HK7281 BLK U	.B.....
	87-A90-312-010		PLUG,CONVERSION WTN-1157R1	A.....
	8Z-CDK-962-010		RC UNIT,RC-ZAT02(VS)	AB.....
	8Z-CK4-962-010		RC UNIT,RC-ZAT04 (VS)	AB.....

アイワ株式会社 〒110-8710 東京都台東区池之端1-2-11 ☎03(3827)3111 (代表)
AIWA CO.,LTD. 2-11, IKENOHATA 1-CHOME, TAITO-KU, TOKYO 110-8710, JAPAN TEL:03 (3827) 3111

931196
Printed in Singapore